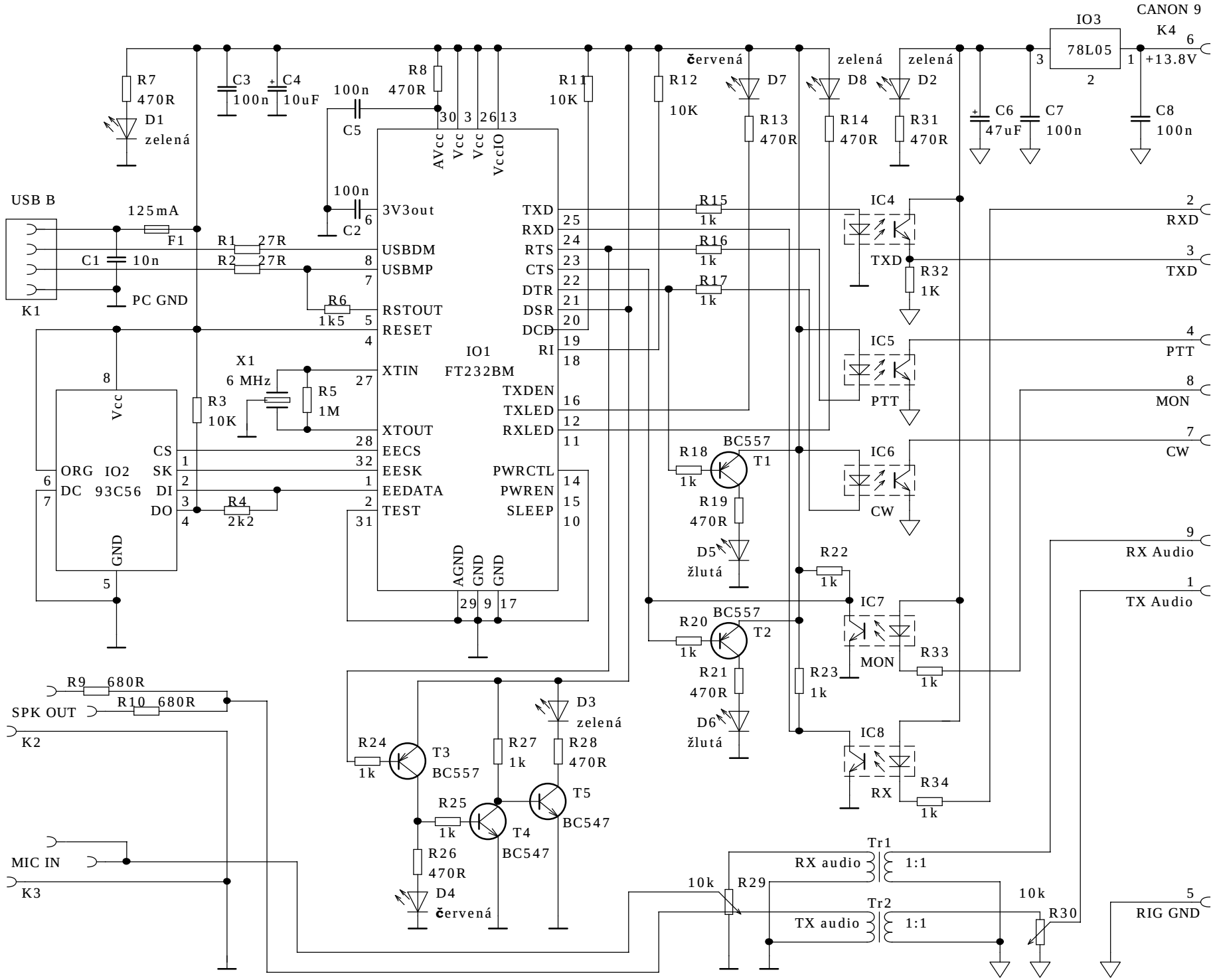
CANON 9
K4
IO3
78L05
+13.8V
R7
470R
D1
zelená
C3
100n
C4
10uF
100n
C5
R8
470R
R11
10K
R12
10K
červená
D7
R13
470R
zelená
D8
R14
470R
zelená
D2
R31
470R
C6
47uF
C7
100n
C8
100n
USB B
125mA
F1
R1
27R
R2
27R
C1
10n
PC GND
K1
100n
C2
R6
1k5
X1
6 MHz
R5
1M
R3
10K
Vcc
ORG
DC
IO2
93C56
CS
SK
DI
DO
GND
R4
2k2
AVcc
Vcc
Vcc
VccIO
3V3out
USBDM
USBMP
RSTOUT
RESET
XTIN
XTOUT
EECS
EESK
EEDATA
TEST
IO1
FT232BM
TXD
RXD
RTS
CTS
DTR
DSR
DCD
RI
TXDEN
TXLED
RXLED
PWRCTL
PWREN
SLEEP
AGND
GND
GND
R15
1k
R16
1k
R17
1k
IC4
TXD
R32
1K
IC5
PTT
IC6
CW
R18
1k
BC557
T1
R19
470R
D5
žlutá
R22
1k
IC7
MON
R33
1k
R20
1k
BC557
T2
R21
470R
D6
žlutá
R23
1k
IC8
RX
R34
1k
2
RXD
3
TXD
4
PTT
8
MON
7
CW
9
RX Audio
1
TX Audio
5
RIG GND
R9
680R
R10
680R
SPK OUT
K2
D3
zelená
R24
1k
T3
BC557
R27
1k
R28
470R
T5
BC547
R25
1k
T4
BC547
R26
470R
D4
červená
MIC IN
K3
Tr1
RX audio
1:1
10k
R29
Tr2
TX audio
1:1
10k
R30